Rockwell Automation

CENTERLINE 2100
MOTOR CONTROL CENTER

PROJECT: FRESHPET ENNIS
MCC: P2-K3-4MCC05

REV	APPROVED	DATE	STAGE

PROJ. DOC. TYPE: COVER SHEET

PROJECT:
FRESHPET ENNIS
P2-K3-4MCC05

CUSTOMER:
THE REYNOLDS COMPANY
0099153144
356039

ORDER-LINE NUMBER:
6506340772-000200

LANG: ENG

Rockwell Automation

ONE LINE COVER SHEET

DRAWN BY: CTO

DATE: 02-DEC-25

CONFIDENTIAL AND PROPRIETARY INFORMATION.
THIS DOCUMENT CONTAINS CONFIDENTIAL AND PROPRIETARY INFORMATION OF ROCKWELL AUTOMATION, INC. AND MAY NOT BE USED, COPIED OR DISCLOSED TO OTHERS EXCEPT WITH THE AUTHORIZED WRITTEN PERMISSION OF ROCKWELL AUTOMATION INC.

SIZE		VER
D	10008815165	00

RA_TB_NEMA_D_H_SAP-11/03/16
RA_TB_NEMA_D_H_CEWS-11/03/16
10008815165_0001

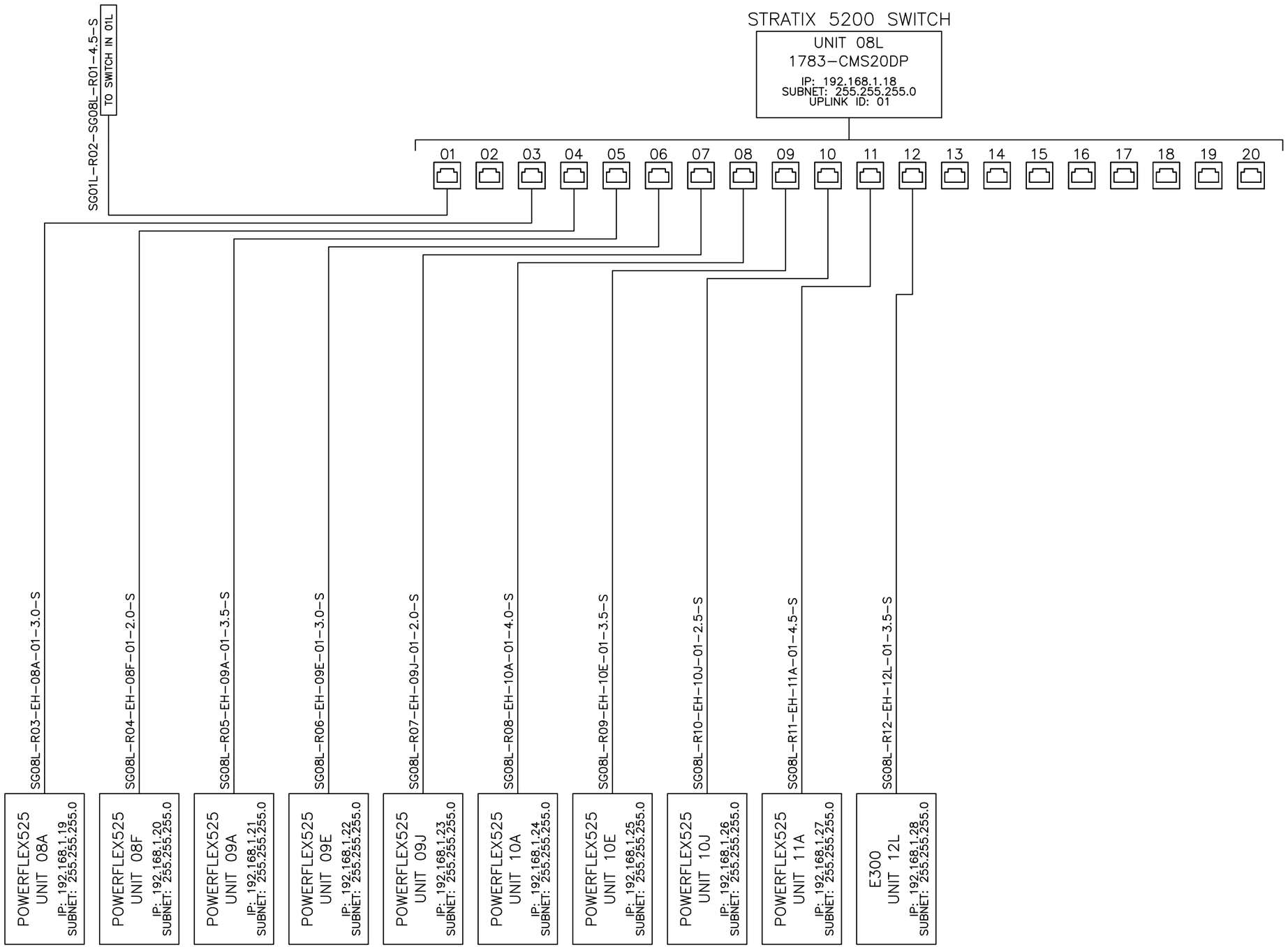

REV	APPROVED	DATE	STAGE

PROJECT:
FRESHPET ENNIS
P2-K3-4MCC05

CUSTOMER:
THE REYNOLDS COMPANY
0099153144
356039

ORDER-LINE NUMBER:
6506340772-000200

PROJ. DOC. TYPE: NETWORK DIAGRAM

LANG: ENG

Rockwell Automation

ETHERNET DIAGRAM

DRAWN BY: CTO

DATE: 02-DEC-25

CONFIDENTIAL AND PROPRIETARY INFORMATION.
THIS DOCUMENT CONTAINS CONFIDENTIAL AND PROPRIETARY INFORMATION OF ROCKWELL AUTOMATION, INC. AND MAY NOT BE USED, COPIED OR DISCLOSED TO OTHERS EXCEPT WITH THE AUTHORIZED WRITTEN PERMISSION OF ROCKWELL AUTOMATION INC.

SIZE D | 10008815165 | VER 00

RA_TB_NEMA_D_H_SAP-11/03/16
RA_TB_NEMA_D_H_DEWS-11/03/16

10008815165_0014

MOTOR CONTROL CENTER STRUCTURE SPECIFICATIONS

ENCLOSURE DATA

NEMA TYPE 1G ENCLOSURES
90" [2286] ENCLOSURE HEIGHT
20" [508] ENCLOSURE DEPTH
FRONT MOUNTED ENCLOSURE STYLE
ANSI 49 ENCLOSURE FINISH
TOTAL NUMBER OF SECTIONS 12
TOTAL NUMBER OF SHIPPING BLOCKS 5
MAIN CIRCUIT BREAKER

INCOMING POWER SYSTEM

WYE/3 PH/3 WIRE W/SOLID GRD NEUT POWER SYSTEM

480V POWER SYSTEM LINE VOLTAGE
60HZ POWER SYSTEM LINE FREQUENCY

CUSTOMER INCOMING CABLES ENTRY: TOP

POWER BUS

600A HORIZONTAL POWER BUS
HORIZONTAL POWER BUS MATERIAL IS COPPER
TIN HORIZONTAL POWER BUS PLATING
65000A RMS HORIZONTAL POWER BUS BRACING

VERTICAL POWER BUS MATERIAL IS TIN PLATED COPPER
AUTOMATIC SHUTTER VERTICAL BUS OPENING PROTECTION

GROUND BUS

0.25" X 1" [6.4] X [25.4] HORIZONTAL GROUND BUS
HORIZONTAL GROUND BUS IS UNPLATED COPPER
GROUND BUS LOCATED IN BOTTOM HORIZONTAL WIREWAY
VERTICAL GROUND BUS: PLUG-IN (STANDARD)

EQUIPMENT GROUND LUG SIZE: #6AWG – 250 KCMIL
INCOMING GROUND CABLES: 2

NEUTRAL BUS

NONE REQUESTED

ONE-LINE LEGEND

UNIT LOCATION: 01A
SCHEMATIC/DIAGRAM: 1000XXXXXXX

UNIT NAMEPLATE

CUSTOMER LOAD WIRE SIZE RANGE
GND/NEUT. WIRE SIZE RANGE

MOTOR CONTROL CENTER STRUCTURE SPECIFICATIONS

NEUTRAL CONNECTION PLATES IN HORIZONTAL WIREWAY

NONE REQUESTED

STANDARD 300A VERTICAL POWER BUS CABINET(S)

01, 02, 03, 04, 05, 06, 07, 08, 09, 10, 11, 12

600A VERTICAL POWER BUS CABINET(S)

NONE REQUESTED

HORIZONTAL NEUTRAL BUS CABINET(S)

NONE REQUESTED

VERTICAL NEUTRAL BUS CABINET(S)

NONE REQUESTED

PULLBOX REQUIRED ON CABINET(S)

NONE REQUESTED

MOTOR CONTROL CENTER STRUCTURE SPECIFICATIONS

ENCLOSURE OPTIONS REQUESTED

MASTER NAMEPLATE REQUIRED WITH 1 LINE OF TEXT

BOTTOM PLATES
VERTICAL WIREWAY TIE-BARS

MOTOR CONTROL CENTER COMMON UNIT OPTIONS

ACRYLIC STYLE UNIT NAMEPLATES
BLACK LETTERS ON WHITE UNIT NAMEPLATE COLOR
3 – LINES OF INFORMATION PER UNIT NAMEPLATE

UNITS PROVIDED WITH STAINLESS STEEL NAMEPLATE SCREWS
IP ADDRESSES NOT PROVIDED ON NAMEPLATES
EXTERNAL OVERLOAD RESET BUTTONS (IF ENCL. OPTION IS A OR D)
UNIT DIAGRAM LOCATION: WITHIN EACH UNIT

NETWORK INFORMATION

NETWORK TYPE: ETHERNET/IP

REV	APPROVED	DATE	STAGE

PROJ. DOC. TYPE: SPECIFICATIONS SHEET

PROJECT:
FRESHPET ENNIS
P2-K3-4MCC05

CUSTOMER:
THE REYNOLDS COMPANY
0099153144
356039

ORDER-LINE NUMBER:
6506340772-000200

LANG: ENG

Rockwell Automation

SPECIFICATIONS SHEET

DRAWN BY: CTO
DATE: 02-DEC-25

CONFIDENTIAL AND PROPRIETARY INFORMATION.
THIS DOCUMENT CONTAINS CONFIDENTIAL AND PROPRIETARY INFORMATION OF ROCKWELL AUTOMATION, INC. AND MAY NOT BE USED, COPIED OR DISCLOSED TO OTHERS EXCEPT WITH THE AUTHORIZED WRITTEN PERMISSION OF ROCKWELL AUTOMATION INC.

SIZE D | 10008815165 | VER 00

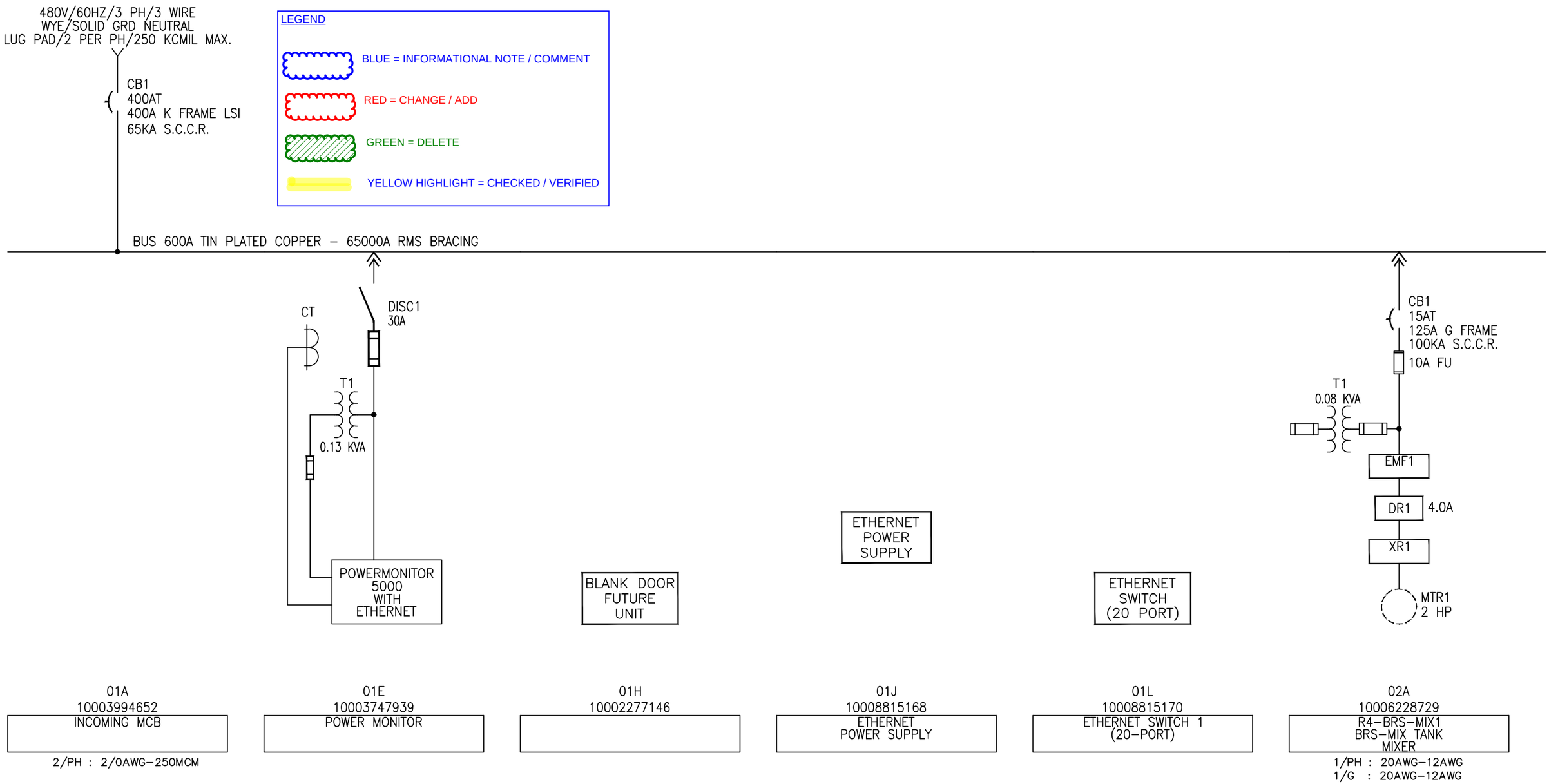

MASTER NAMEPLATE
P2–K3–4MCC05

REV	APPROVED	DATE	STAGE

PROJ. DOC. TYPE: ONE LINE

PROJECT:
FRESHPET ENNIS
P2–K3–4MCC05

CUSTOMER:
THE REYNOLDS COMPANY
0099153144
356039

ORDER–LINE NUMBER:
6506340772–000200

LANG: ENG

Rockwell Automation

ONE LINE SCHEMATIC

DRAWN BY: CTO

DATE: 02–DEC–25

CONFIDENTIAL AND PROPRIETARY INFORMATION.
THIS DOCUMENT CONTAINS CONFIDENTIAL AND PROPRIETARY INFORMATION OF ROCKWELL AUTOMATION, INC. AND MAY NOT BE USED, COPIED OR DISCLOSED TO OTHERS EXCEPT WITH THE AUTHORIZED WRITTEN PERMISSION OF ROCKWELL AUTOMATION INC.

SHEET 3 OF 14

SIZE D | 10008815165 | VER 00

RA_TB_NEMA_D_H_SAP–11/03/16
RA_TB_NEMA_D_H_CEWS–11/03/16

10008815165_0003

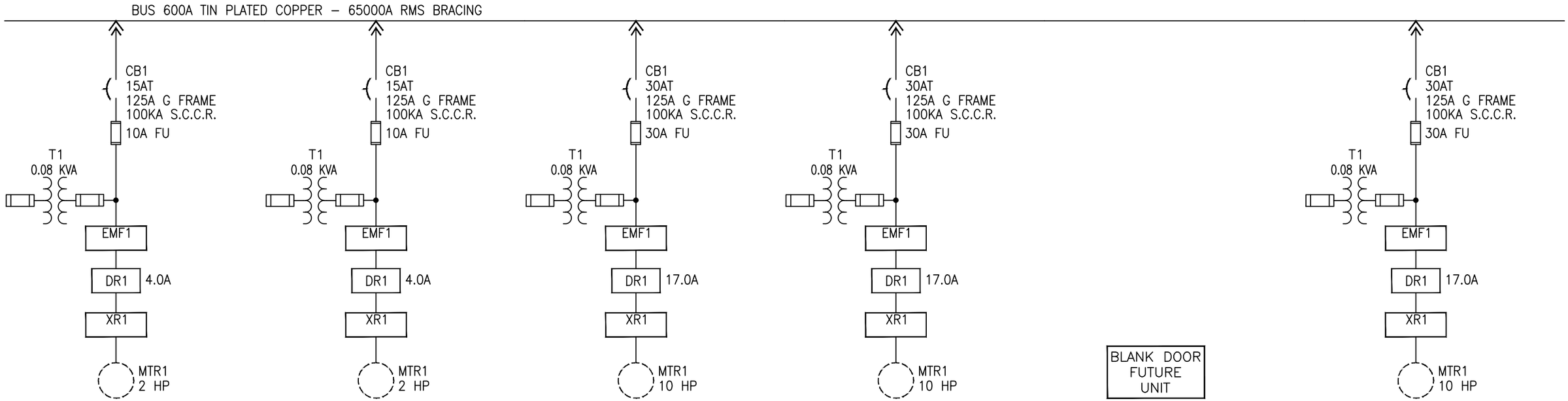

02E	02J	03A	03F	03L	04A
10006228729	10006228729	10006339770	10006339770	10002277148	10006339770
R4–BRS–MIX2 BRS–HOLD TANK A MIXER	R4–BRS–MIX3 BRS–HOLD TANK B MIXER	R4–BRS–PMP1 BRS–MIX TANK PUMP	R4–BRS–PMP2 BRS–HOLD TANK A PUMP		R4–BRS–PMP3 BRS–HOLD TANK B PUMP
1/PH : 20AWG–12AWG 1/G : 20AWG–12AWG	1/PH : 20AWG–12AWG 1/G : 20AWG–12AWG	1/PH : 20AWG–12AWG 1/G : 20AWG–12AWG	1/PH : 20AWG–12AWG 1/G : 20AWG–12AWG		1/PH : 20AWG–12AWG 1/G : 20AWG–12AWG

REV	APPROVED	DATE	STAGE

PROJECT:
FRESHPET ENNIS
P2–K3–4MCC05

CUSTOMER:
THE REYNOLDS COMPANY
0099153144
356039

ORDER–LINE NUMBER:
6506340772–000200

PROJ. DOC. TYPE: ONE LINE

LANG: ENG

Rockwell Automation

ONE LINE SCHEMATIC

DRAWN BY: CTO

DATE: 02–DEC–25

CONFIDENTIAL AND PROPRIETARY INFORMATION.
THIS DOCUMENT CONTAINS CONFIDENTIAL AND PROPRIETARY INFORMATION OF ROCKWELL AUTOMATION, INC. AND MAY NOT BE USED, COPIED OR DISCLOSED TO OTHERS EXCEPT WITH THE AUTHORIZED WRITTEN PERMISSION OF ROCKWELL AUTOMATION INC.

SIZE D | 10008815165 | VER 00

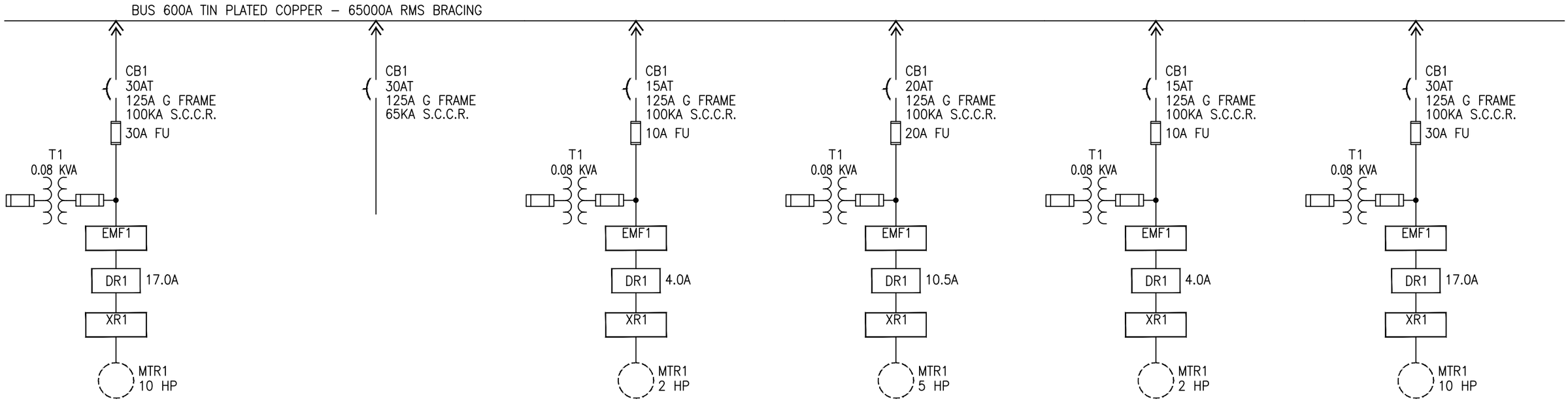

04F	04L	05A	05E	05J	06A
10006339770	10003993582	10006228729	10006228717	10006228729	10006339770
R4–BRS–PMP4 BRS–HOLD TANK C PUMP	R4–FRH–LFT1 FORMING HEAD 1 LIFT CTRL PANEL 1	R4–BRS–MIX4 BRS–HOLD TANK C MIXER	R4–BRS–PMP5 PUMP PROCESS 2 7GPM	R4–BTH–CVN1 DIPPING BATH CVN DRM MOTOR 1	R4–FRH–CTB1 FORMING HEAD CUTTING BLADE 1
1/PH : 20AWG–12AWG 1/G : 20AWG–12AWG	1/PH : 14AWG–1/0AWG	1/PH : 20AWG–12AWG 1/G : 20AWG–12AWG	1/PH : 20AWG–12AWG 1/G : 20AWG–12AWG	1/PH : 20AWG–12AWG 1/G : 20AWG–12AWG	1/PH : 20AWG–12AWG 1/G : 20AWG–12AWG

REV	APPROVED	DATE	STAGE

PROJ. DOC. TYPE: ONE LINE

PROJECT:
FRESHPET ENNIS
P2–K3–4MCC05

CUSTOMER:
THE REYNOLDS COMPANY
0099153144
356039

ORDER–LINE NUMBER:
6506340772–000200

LANG: ENG

Rockwell Automation

ONE LINE SCHEMATIC

DRAWN BY: CTO

DATE: 02–DEC–25

CONFIDENTIAL AND PROPRIETARY INFORMATION.
THIS DOCUMENT CONTAINS CONFIDENTIAL AND PROPRIETARY INFORMATION OF ROCKWELL AUTOMATION, INC. AND MAY NOT BE USED, COPIED OR DISCLOSED TO OTHERS EXCEPT WITH THE AUTHORIZED WRITTEN PERMISSION OF ROCKWELL AUTOMATION INC.

SIZE D | 10008815165 | VER 00

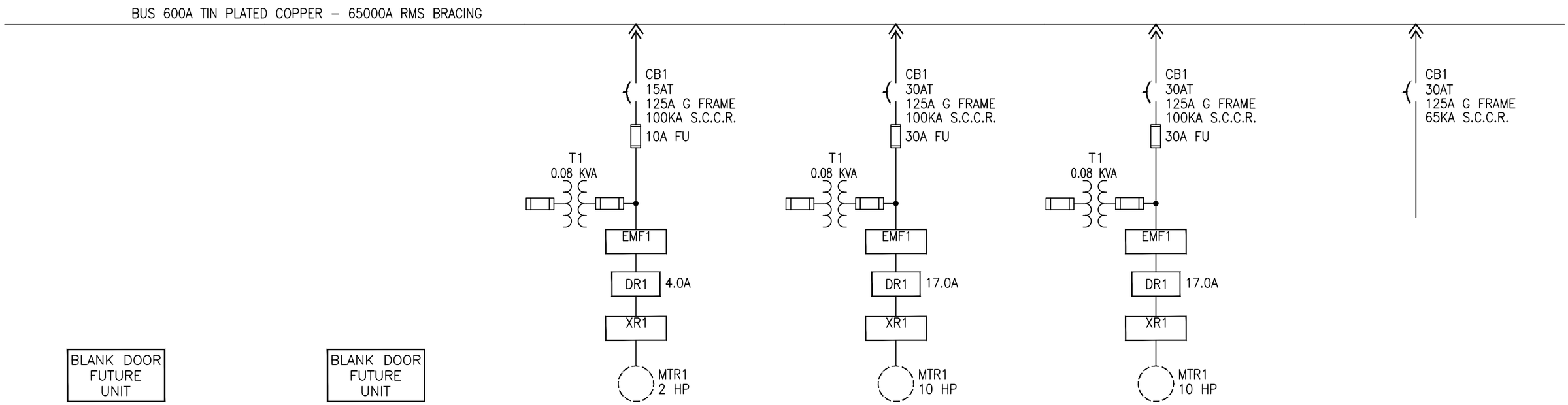

06F	06H	06J	07A	07F	07L
10002277148	10002277146	10006228729	10006339770	10006339770	10003993582
		R4–BTH–CVN2 DIPPING BATH CVN DRM MOTOR 2	R4–FRH–CTB2 FORMING HEAD CUTTING BLADE 2	SPARE	R4–FRH–LFT2 FORMING HEAD 2 LIFT CTRL PANEL 2
		1/PH : 20AWG–12AWG 1/G : 20AWG–12AWG	1/PH : 20AWG–12AWG 1/G : 20AWG–12AWG	1/PH : 20AWG–12AWG 1/G : 20AWG–12AWG	1/PH : 14AWG–1/0AWG

REV	APPROVED	DATE	STAGE

PROJECT:
FRESHPET ENNIS
P2–K3–4MCC05

CUSTOMER:
THE REYNOLDS COMPANY
0099153144
356039

ORDER–LINE NUMBER:
6506340772–000200

PROJ. DOC. TYPE: ONE LINE

LANG: ENG

Rockwell Automation

ONE LINE SCHEMATIC

DRAWN BY: CTO

DATE: 02–DEC–25

CONFIDENTIAL AND PROPRIETARY INFORMATION.
THIS DOCUMENT CONTAINS CONFIDENTIAL AND PROPRIETARY INFORMATION OF ROCKWELL AUTOMATION, INC. AND MAY NOT BE USED, COPIED OR DISCLOSED TO OTHERS EXCEPT WITH THE AUTHORIZED WRITTEN PERMISSION OF ROCKWELL AUTOMATION INC.

SIZE D | 10008815165 | VER 00

RA_TB_NEMA_D_H_SAP–11/03/16
RA_TB_NEMA_D_H_CEWS–11/03/16

10008815165_0006

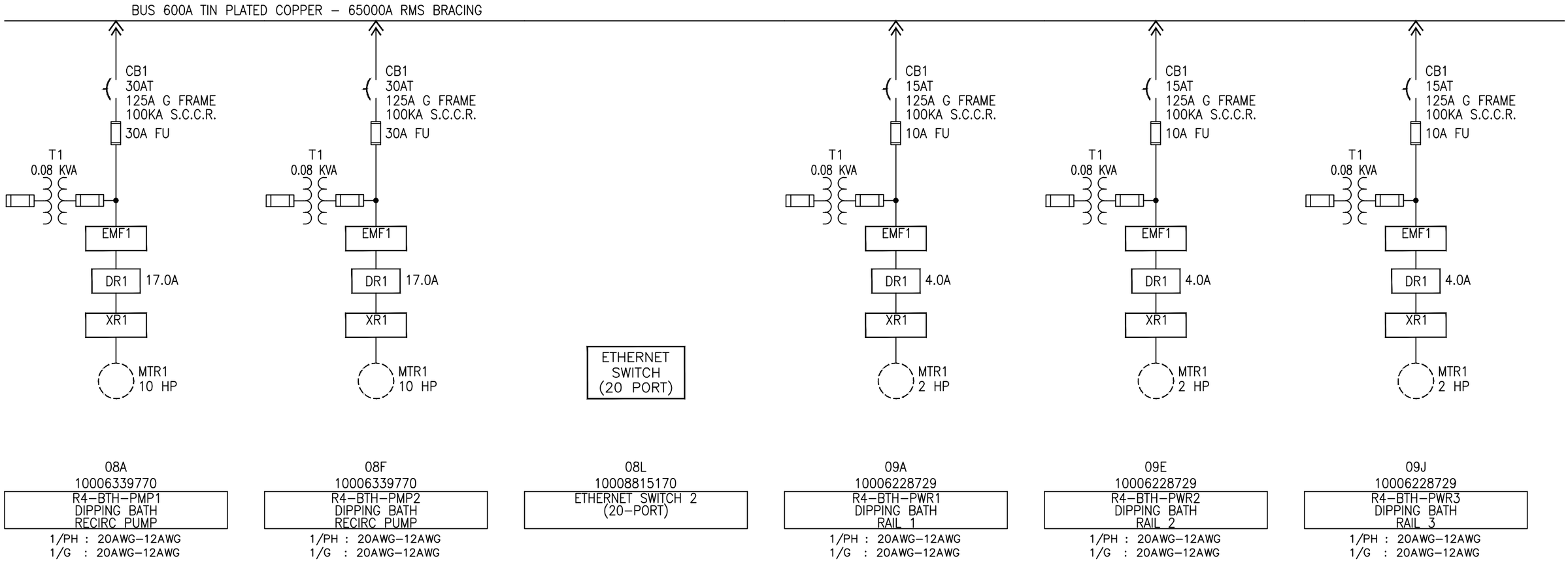

REV	APPROVED	DATE	STAGE

PROJ. DOC. TYPE: ONE LINE

PROJECT:
FRESHPET ENNIS
P2–K3–4MCC05

CUSTOMER:
THE REYNOLDS COMPANY
0099153144
356039

ORDER–LINE NUMBER:
6506340772–000200

LANG: ENG

Rockwell Automation

ONE LINE SCHEMATIC

DRAWN BY: CTO

DATE: 02–DEC–25

CONFIDENTIAL AND PROPRIETARY INFORMATION.
THIS DOCUMENT CONTAINS CONFIDENTIAL AND PROPRIETARY INFORMATION OF ROCKWELL AUTOMATION, INC. AND MAY NOT BE USED, COPIED OR DISCLOSED TO OTHERS EXCEPT WITH THE AUTHORIZED WRITTEN PERMISSION OF ROCKWELL AUTOMATION INC.

SIZE D | 10008815165 | VER 00

RA_TB_NEMA_D_H_SAP–11/03/16
RA_TB_NEMA_D_H_CEWS–11/03/16

10008815165_0007

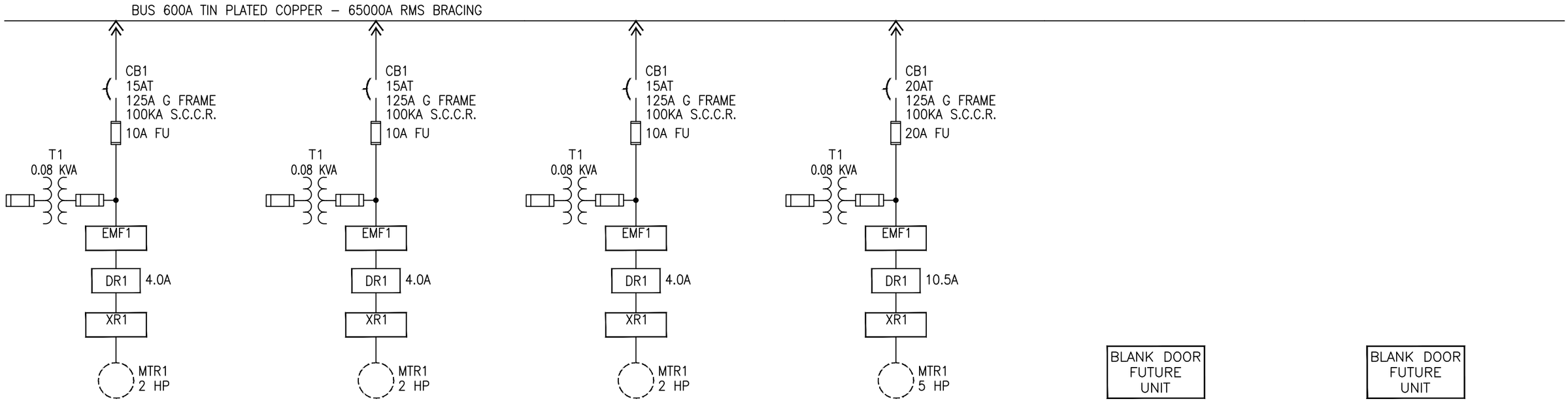

10A	10E	10J	11A	11E	11K
10006228729	10006228729	10006228729	10006228717	10002108703	10002277146
R4–BTH–PWR4 DIPPING BATH RAIL 4	R4–BRS–FDR1 SALT FEEDER AUGER	R4–BRS–AGT1 SALT FEEDER AGITATOR	SPARE		
1/PH : 20AWG–12AWG 1/G : 20AWG–12AWG	1/PH : 20AWG–12AWG 1/G : 20AWG–12AWG	1/PH : 20AWG–12AWG 1/G : 20AWG–12AWG	1/PH : 20AWG–12AWG 1/G : 20AWG–12AWG		

REV	APPROVED	DATE	STAGE

PROJECT:
FRESHPET ENNIS
P2–K3–4MCC05

CUSTOMER:
THE REYNOLDS COMPANY
0099153144
356039

ORDER–LINE NUMBER:
6506340772–000200

PROJ. DOC. TYPE: ONE LINE

LANG: ENG

Rockwell Automation

ONE LINE SCHEMATIC

DRAWN BY: CTO

DATE: 02–DEC–25

CONFIDENTIAL AND PROPRIETARY INFORMATION.
THIS DOCUMENT CONTAINS CONFIDENTIAL AND PROPRIETARY INFORMATION OF ROCKWELL AUTOMATION, INC. AND MAY NOT BE USED, COPIED OR DISCLOSED TO OTHERS EXCEPT WITH THE AUTHORIZED WRITTEN PERMISSION OF ROCKWELL AUTOMATION INC.

SIZE D | 10008815165 | VER 00

RA_TB_NEMA_D_H_SAP–11/03/16
RA_TB_NEMA_D_H_CEWS–11/03/16

10008815165_0008

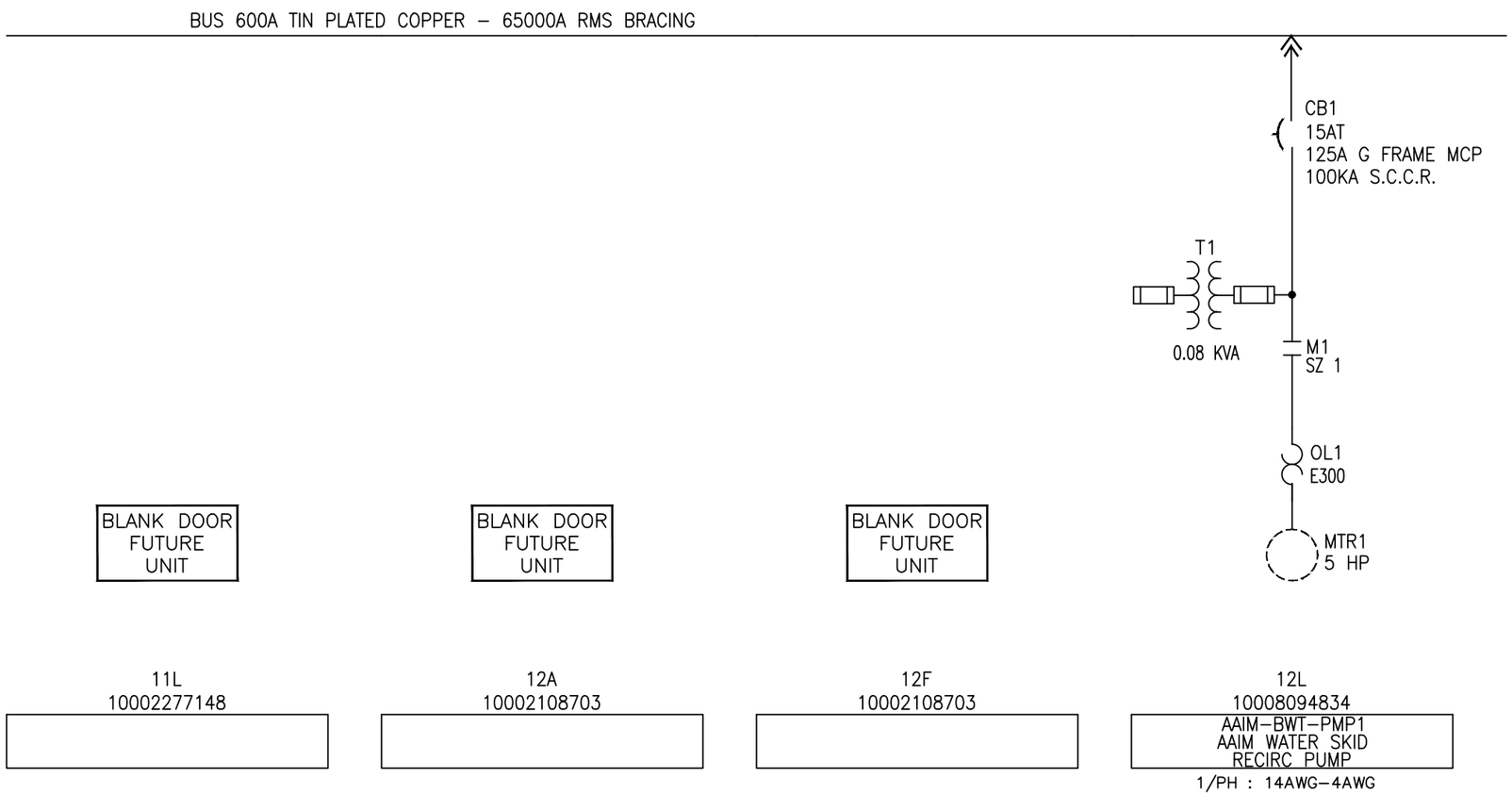

REV	APPROVED	DATE	STAGE

PROJ. DOC. TYPE: ONE LINE

PROJECT:
FRESHPET ENNIS
P2–K3–4MCC05

CUSTOMER:
THE REYNOLDS COMPANY
0099153144
356039

ORDER–LINE NUMBER:
6506340772–000200

LANG: ENG

Rockwell Automation

ONE LINE SCHEMATIC

DRAWN BY: CTO

DATE: 02–DEC–25

CONFIDENTIAL AND PROPRIETARY INFORMATION.
THIS DOCUMENT CONTAINS CONFIDENTIAL AND PROPRIETARY INFORMATION OF ROCKWELL AUTOMATION, INC. AND MAY NOT BE USED, COPIED OR DISCLOSED TO OTHERS EXCEPT WITH THE AUTHORIZED WRITTEN PERMISSION OF ROCKWELL AUTOMATION INC.

SIZE D | 10008815165 | VER 00

Ethernet Power Supply

ENET PS Loc	ENET PS Cat #	2–Branch Redundant Unit Loc (1)	2–Branch Redundant Cat # (1)	Max Amp (A)	Left Branch Sections	Left Branch Total Current (A)	Right Branch Sections	Right Branch Total Current (A)
01J	2100–EPS10KXWD–768C			10.00	1	2.60	2 – 12	2.62

(1) Column is left blank when the 2–branch redundant unit is not utilized.

(2) Customer connection is made to terminal blocks in the corresponding 2–Branch Redundant Unit.

REV	APPROVED	DATE	STAGE

PROJECT:
FRESHPET ENNIS
P2–K3–4MCC05

CUSTOMER:
THE REYNOLDS COMPANY
0099153144
356039

ORDER–LINE NUMBER:
6506340772–000200

PROJ. DOC. TYPE: POWER SUPPLIES

LANG: ENG

Rockwell Automation

ETHERNET POWER SUPPLIES

DRAWN BY: CTO

DATE: 02–DEC–25

CONFIDENTIAL AND PROPRIETARY INFORMATION.
THIS DOCUMENT CONTAINS CONFIDENTIAL AND PROPRIETARY INFORMATION OF ROCKWELL AUTOMATION, INC. AND MAY NOT BE USED, COPIED OR DISCLOSED TO OTHERS EXCEPT WITH THE AUTHORIZED WRITTEN PERMISSION OF ROCKWELL AUTOMATION INC.

SIZE D | 10008815165 | VER 00

RA_TB_NEMA_D_H_SAP–11/03/16
RA_TB_NEMA_D_H_DEVIS–11/03/16
10008815165_0010

Ethernet Switch		Switch-to-Adapter Ethernet Cable (1)				Manufacturing Code (2)	Device Ethernet Cable		Device				
Switch Data	Port (3)	Adapter Section Loc.	Adapter Port Loc.	Label	Length (m)		Label	Length (m)	Unit Loc.	Type	IP Address	Subnet Mask	Current Draw (A)
Uplink ID: 01 Switch Section: 1 Switch Location: Unit 01L Catalog Number: 1783-CMS20DP IP Address: 192.168.1.3 Subnet Mask: 255.255.255.0 Current Draw (A) 2.60	1									Customer Uplink			
	2					---	SG01L-R02-SG08L-R01-4.5-S	4.5	08L	SW to SW	See Switch Info	See Switch Info	---
	3					23B	SG01L-R03-EH-01E-01-2.5-A	2.5	01E	PM5000	192.168.1.1	255.255.255.0	0.00
	4					23B	SG01L-R04-EH-01E-02-2.5-S	2.5	01E	PM5000	192.168.1.2	255.255.255.0	0.00
	5					43B	SG01L-R05-EH-02A-01-3.5-S	3.5	02A	PowerFlex525	192.168.1.4	255.255.255.0	0.00
	6					43B	SG01L-R06-EH-02E-01-3.0-S	3.0	02E	PowerFlex525	192.168.1.5	255.255.255.0	0.00
	7					43B	SG01L-R07-EH-02J-01-2.0-S	2.0	02J	PowerFlex525	192.168.1.6	255.255.255.0	0.00
	8					63B	SG01L-R08-EH-03A-01-4.0-S	4.0	03A	PowerFlex525	192.168.1.7	255.255.255.0	0.00
	9					63B	SG01L-R09-EH-03F-01-3.0-S	3.0	03F	PowerFlex525	192.168.1.8	255.255.255.0	0.00
	10					83B	SG01L-R10-EH-04A-01-4.5-S	4.5	04A	PowerFlex525	192.168.1.9	255.255.255.0	0.00
	11					83B	SG01L-R11-EH-04F-01-3.5-S	3.5	04F	PowerFlex525	192.168.1.10	255.255.255.0	0.00
	12					103B	SG01L-R12-EH-05A-01-5.0-S	5.0	05A	PowerFlex525	192.168.1.11	255.255.255.0	0.00
	13					103B	SG01L-R13-EH-05E-01-4.5-S	4.5	05E	PowerFlex525	192.168.1.12	255.255.255.0	0.00
	14					103B	SG01L-R14-EH-05J-01-3.5-S	3.5	05J	PowerFlex525	192.168.1.13	255.255.255.0	0.00
	15					123B	SG01L-R15-EH-06A-01-5.5-S	5.5	06A	PowerFlex525	192.168.1.14	255.255.255.0	0.00
	16					123B	SG01L-R16-EH-06J-01-4.0-S	4.0	06J	PowerFlex525	192.168.1.15	255.255.255.0	0.00
	17					143B	SG01L-R17-EH-07A-01-6.0-S	6.0	07A	PowerFlex525	192.168.1.16	255.255.255.0	0.00
	18					143B	SG01L-R18-EH-07F-01-5.0-S	5.0	07F	PowerFlex525	192.168.1.17	255.255.255.0	0.00
	19												
	20												
Uplink ID: 01 Switch Section: 8 Switch Location: Unit 08L Catalog Number: 1783-CMS20DP IP Address: 192.168.1.18 Subnet Mask: 255.255.255.0 Current Draw (A) 2.60	1					---	SG01L-R02-SG08L-R01-4.5-S	4.5	01L	SW to SW	See Switch Info	See Switch Info	---
	2												
	3					23B	SG08L-R03-EH-08A-01-3.0-S	3.0	08A	PowerFlex525	192.168.1.19	255.255.255.0	0.00
	4					23B	SG08L-R04-EH-08F-01-2.0-S	2.0	08F	PowerFlex525	192.168.1.20	255.255.255.0	0.00
	5					43B	SG08L-R05-EH-09A-01-3.5-S	3.5	09A	PowerFlex525	192.168.1.21	255.255.255.0	0.00
	6					43B	SG08L-R06-EH-09E-01-3.0-S	3.0	09E	PowerFlex525	192.168.1.22	255.255.255.0	0.00
	7					43B	SG08L-R07-EH-09J-01-2.0-S	2.0	09J	PowerFlex525	192.168.1.23	255.255.255.0	0.00
	8					63B	SG08L-R08-EH-10A-01-4.0-S	4.0	10A	PowerFlex525	192.168.1.24	255.255.255.0	0.00
	9					63B	SG08L-R09-EH-10E-01-3.5-S	3.5	10E	PowerFlex525	192.168.1.25	255.255.255.0	0.00
	10					63B	SG08L-R10-EH-10J-01-2.5-S	2.5	10J	PowerFlex525	192.168.1.26	255.255.255.0	0.00
	11					83B	SG08L-R11-EH-11A-01-4.5-S	4.5	11A	PowerFlex525	192.168.1.27	255.255.255.0	0.00
	12					103B	SG08L-R12-EH-12L-01-3.5-S	3.5	12L	E300	192.168.1.28	255.255.255.0	0.00
	13												
	14												
	15												
	16												
	17												
	18												
	19												
	20												

(1) This column group details an Ethernet cable that connects a switch port to a vertical wireway adapter. If this column group is blank, the switch port connects directly to the device utilizing the cable called out in the "Device Ethernet Cable" section.

(2) For Rockwell Automation Manufacturing Purposes Only

(3) Some Stratix Ethernet switch ports leverage gigabit Ethernet connections and are shown on the MCC network table and network diagram with a "G" located before the switch port number. Consult the Stratix Technical Data (publication 1783-TD001) for more information on the physical Stratix port representations.

REV	APPROVED	DATE	STAGE

PROJECT:
FRESHPET ENNIS
P2-K3-4MCC05

CUSTOMER:
THE REYNOLDS COMPANY
0099153144
356039

ORDER-LINE NUMBER:
6506340772-000200

PROJ. DOC. TYPE: ETHERNET CABLES

LANG: ENG

Rockwell Automation

ETHERNET CABLES

DRAWN BY: CTO

DATE: 02-DEC-25

CONFIDENTIAL AND PROPRIETARY INFORMATION.
THIS DOCUMENT CONTAINS CONFIDENTIAL AND PROPRIETARY INFORMATION OF ROCKWELL AUTOMATION, INC. AND MAY NOT BE USED, COPIED OR DISCLOSED TO OTHERS EXCEPT WITH THE AUTHORIZED WRITTEN PERMISSION OF ROCKWELL AUTOMATION INC.

SIZE D | 10008815165 | VER 00

VERTICAL WIREWAY ADAPTER PLACEMENT KEY

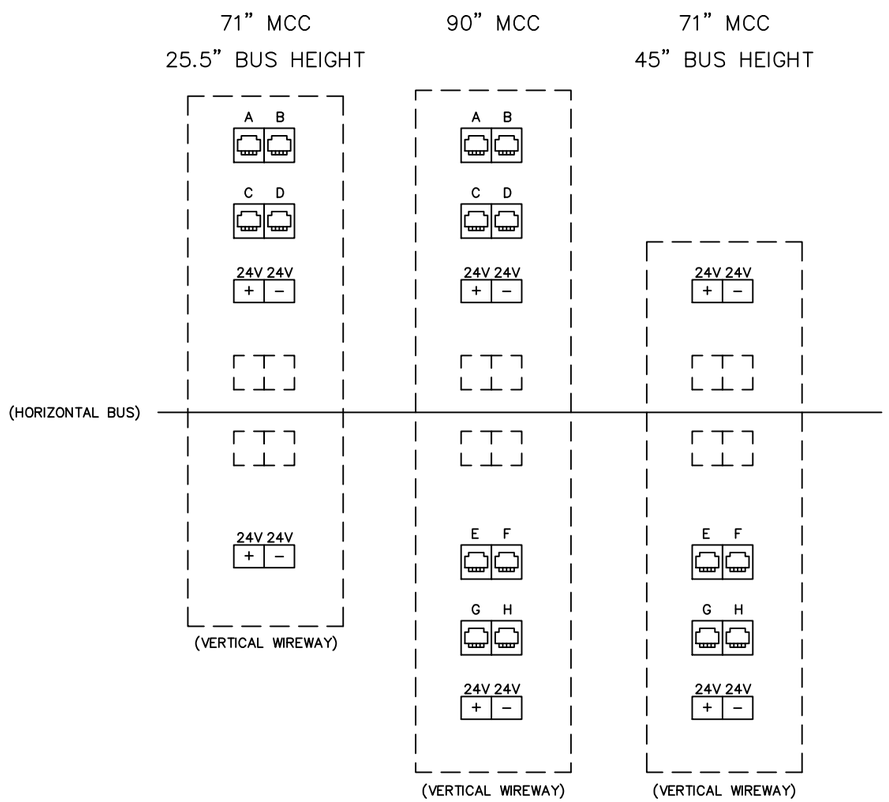

NOTE: PORT LOCATION KEY IS FOR REFERENCE ONLY. ACTUAL LAYOUT MAY DIFFER BASED ON VERTICAL WIREWAY CONFIGURATION AS SHOWN IN NETWORK TABLE.

CABLE LABEL LEGEND

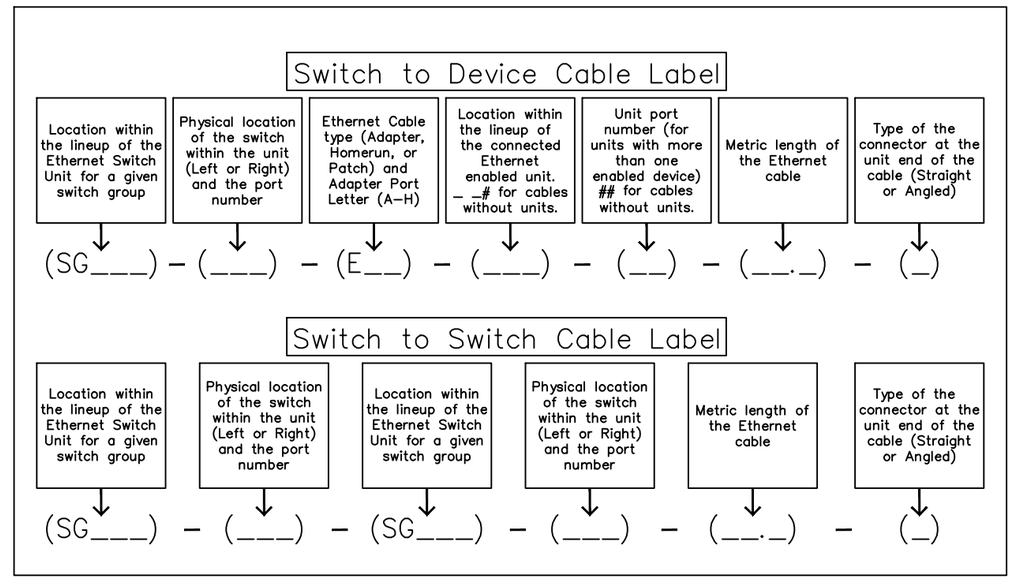

REV	APPROVED	DATE	STAGE

PROJ. DOC. TYPE: ETHERNET REFERENCE PAGE

PROJECT:
FRESHPET ENNIS
P2–K3–4MCC05

CUSTOMER:
THE REYNOLDS COMPANY
0099153144
356039

ORDER–LINE NUMBER:
6506340772–000200

LANG: ENG

Rockwell Automation

ETHERNET REFERENCE PAGE

DRAWN BY: CTO

DATE: 02–DEC–25

CONFIDENTIAL AND PROPRIETARY INFORMATION.
THIS DOCUMENT CONTAINS CONFIDENTIAL AND PROPRIETARY INFORMATION OF ROCKWELL AUTOMATION, INC. AND MAY NOT BE USED, COPIED OR DISCLOSED TO OTHERS EXCEPT WITH THE AUTHORIZED WRITTEN PERMISSION OF ROCKWELL AUTOMATION INC.

SIZE D | 10008815165 | VER 00

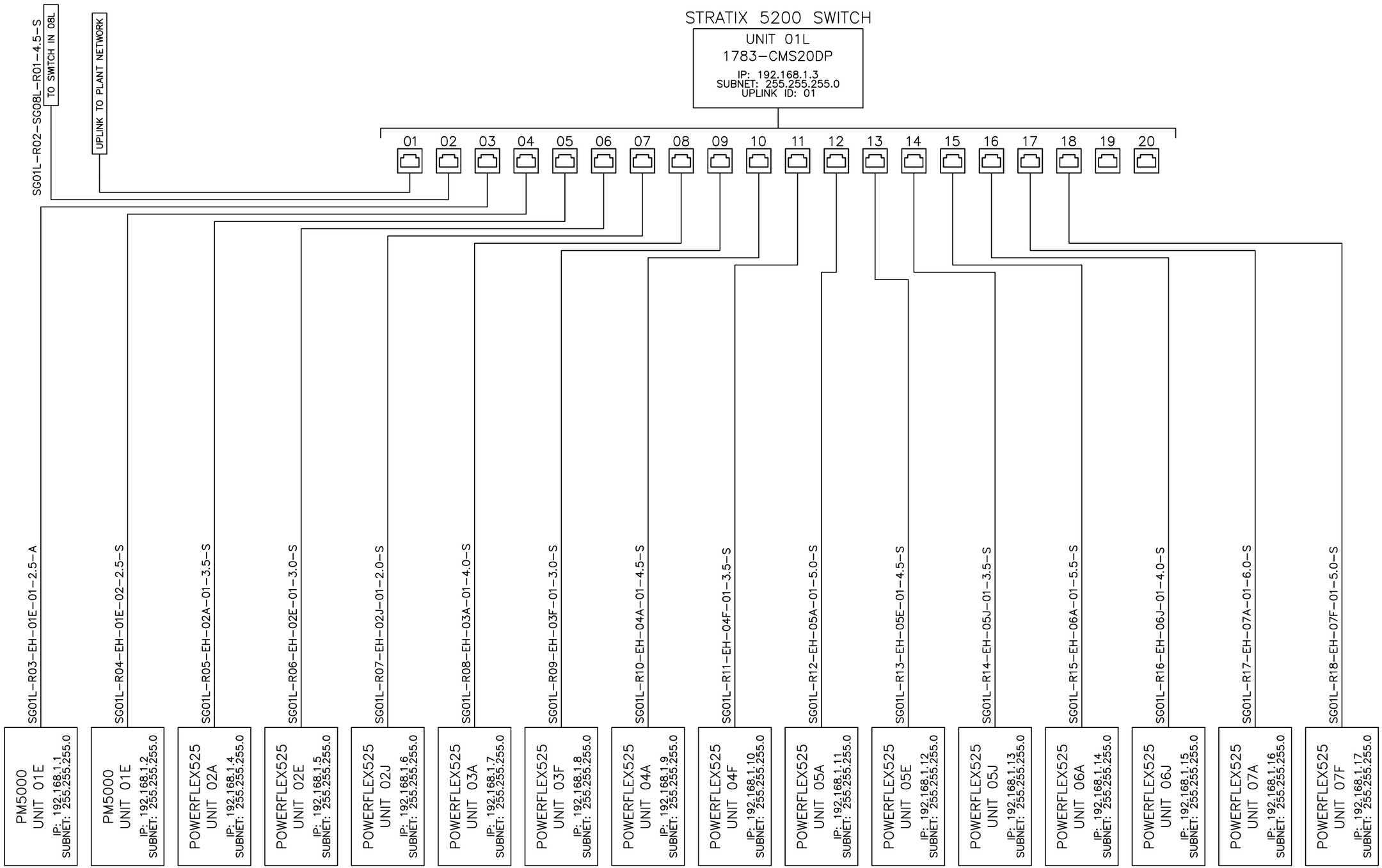

REV	APPROVED	DATE	STAGE

PROJECT:
FRESHPET ENNIS
P2-K3-4MCC05

CUSTOMER:
THE REYNOLDS COMPANY
0099153144
356039

ORDER-LINE NUMBER:
6506340772-000200

PROJ. DOC. TYPE: NETWORK DIAGRAM

LANG: ENG

Rockwell Automation

ETHERNET DIAGRAM

DRAWN BY: CTO

DATE: 02-DEC-25

CONFIDENTIAL AND PROPRIETARY INFORMATION.
THIS DOCUMENT CONTAINS CONFIDENTIAL AND PROPRIETARY INFORMATION OF ROCKWELL AUTOMATION, INC. AND MAY NOT BE USED, COPIED OR DISCLOSED TO OTHERS EXCEPT WITH THE AUTHORIZED WRITTEN PERMISSION OF ROCKWELL AUTOMATION INC.

SIZE D | 10008815165 | VER 00

RA_TB_NEMA_D_H_SAP-11/03/16
RA_TB_NEMA_D_H_OEWS-11/03/16

10008815165_0013